SIERRA PACIFIC WINDOWS

Wood Inswing Door XX Installation/Non-Impact

CCL Listing #429-H-506.05-.09	Intertek Test Report #: L9042.01-901-47

Wood Inswing Door XX
Through Frame Installation / WDMA Instructions / Non-Impact

SHEET: 1 OF 2		DRAWN BY: TH

TEST REPORT SUMMARY:

- ID XX, MAXIMUM BASIC UNIT FRAME SIZE: **74" (1893mm) x 98" (2489mm)**
- OVERALL DESIGN PRESSURE: **+25.06 psf**
- STRUCTURAL TEST PRESSURE: **+37.59 psf**
- RATING: **CLASS LC-PG25**

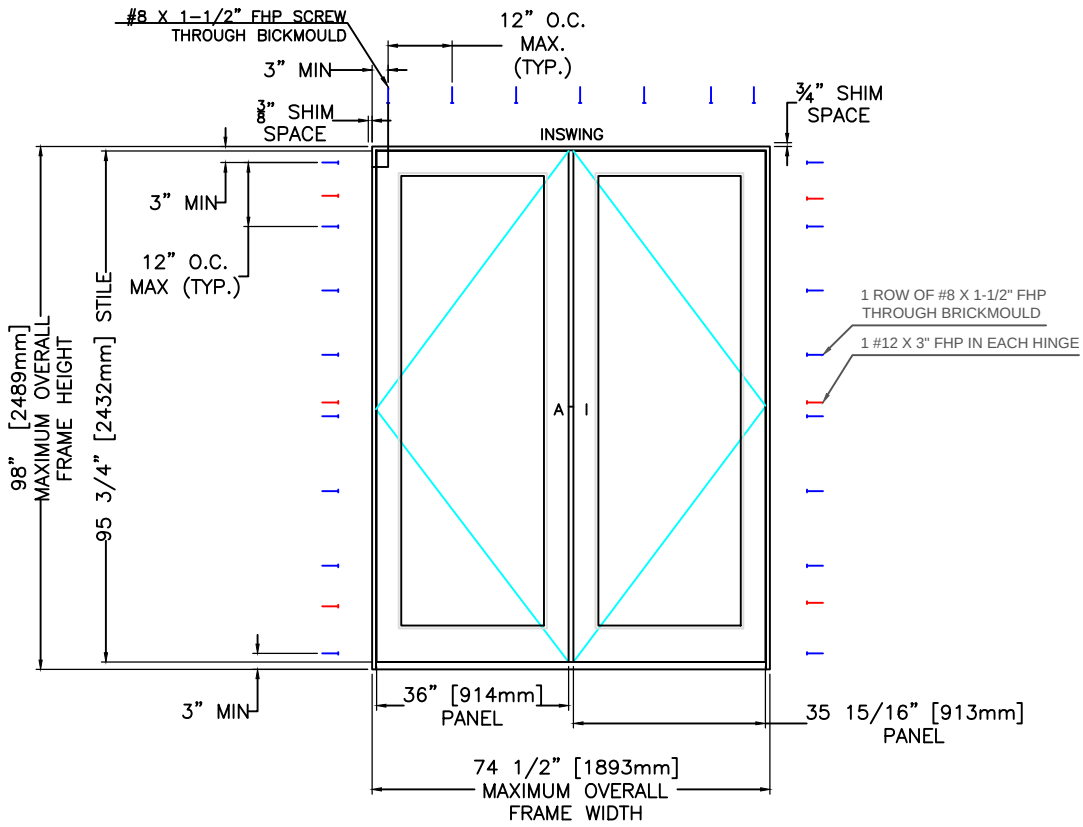

INSTALLATION NOTES:

1. USE 2" x _ PINE FOR ROUGH OPENING
2. APPLY A CONTINUOUS BEAD OF SEALANT ALONG THE BACKSIDE OF THE NAIL FLANGE ALONG BOTH SIDE JAMBS AND HEAD
3. PLACE WOOD SHIMS EVERY 6-10"
4. 3/4" MAXIMUM SHIM SPACE AT HEAD AND 3/8" AT SIDE JAMB
5. TACK THE DOOR IN PLACE WITH ONE #8 X 3" FLAT HEAD SCREW IN THE TOP BRICKMOULD WITHIN 3"-6" OF EACH CORNER INTO R.O. FRAMING. 3/8" MINIMUM EDGE DISTANCE
6. 1" MINIMUM FASTENER EMBEDMENT INTO ROUGH FRAMING MATERIAL
7. MAXIMUM DOOR SIZE: B.U.S. (Basic Unit Size) =

--- SINGLE UNIT, MAXIMUM BASIC UNIT FRAME SIZE:

74" (1893mm) x 98" (2489mm)

8. THIS INFORMATION APPLIES TO THIS SIZE AND SMALLER UNITS
9. INSTALL ONE #12 X 3" FLAT HEAD SCREW IN EACH HINGE INTO THE TRIMMER STUD TO ENSURE PROPER ANCHORING OF THE DOOR
10. INSTALL ONE #12 X 3" FLAT HEAD SCREW THRU THE HEAD STRIKE PLATE
11. INSTALL #8 X 3" FLAT HEAD SCREWS SPACED 3"-6" FROM THE CORNERS AND APPROXIMATELY 12"-16" ON CENTER, THROUGH THE BRICKMOULD INTO R.O. FRAMING. 3/8" MINIMUM EDGE DISTANCE
12. APPLY POLYURETHANE SEALANT OVER EACH SCREW HEAD
13. APPLY SEALANT AROUND THE PERIMETER OF THE UNIT AFTER THE EXTERIOR WALL FINISH HAS BEEN APPLIED.

GENERAL INSTALLATION NOTES:

- Check rough opening for proper size, plumb, level and square.
- Make all necessary adjustments to ensure rough opening is plumb, level & square.
- Sill must be flat, level and capable of supporting the weight of the unit.
- Opening must allow a maximum of 3/4" shim space at head and 3/8" at side jambs.
- Consult full installation instructions found on the Sierra Pacific web site, www.sierrapacificwindows.com, for all recommended installation procedures.
- Wood buck, framing, fasteners, sealant and all wall system materials are provided **by others**

FLASHING

- For units that have to meet a specific DP (Design Pressure) rating, any kind of building wrap must be folded and taped away from each rough opening before the unit is installed. Unit must come in contact with the building's bare sheathing. A bead of silicone must be applied to the backside of the nail fin where it meets the unit, at head and jambs.
- Once unit is installed and flashed properly, the building wrap must be reapplied and trimmed flush with the unit's exterior. A bead of sealant must be placed along the seam joint of the building wrap and the unit. Tape the corner cuts in the building wrap. See full window installation brochure for complete flashing details.

Installation requirements may vary in particular locations and in other types of construction. Proper installation is essential, and Sierra Pacific Windows, recommends consultation with an AAMA Certified Installer, or other qualified, registered building professional before installation of any Sierra Pacific product. Proper installation of Sierra Pacific products is the responsibility of the installer. Sierra Pacific is not responsible for proper installation. Sierra Pacific is not responsible for the design of, conditions in, or performance of building construction beyond the perimeters of the Sierra Pacific units. Sierra Pacific is not responsible for proper integration of the Sierra Pacific units with the weather-repellent systems of the building.

SIERRA PACIFIC WINDOWS

Wood Inswing Door XX
Installation/Non-Impact

CCL Listing #429-H-506.05-.09 | Intertek Test Report #: L9042.01-901-47

Wood Inswing Door XX
Through Frame Installation / WDMA Instructions / Non-Impact

SHEET: 2 OF 2 | DRAWN BY: TH

TEST REPORT SUMMARY:

- C-ID WITH SIDELITE, MAXIMUM BASIC UNIT FRAME SIZE: **74" (1893mm) x 98" (2489mm)**
- OVERALL DESIGN PRESSURE: **+25.06 psf**
- STRUCTURAL TEST PRESSURE: **+37.59 psf**
- RATING: **CLASS LC-PG25**

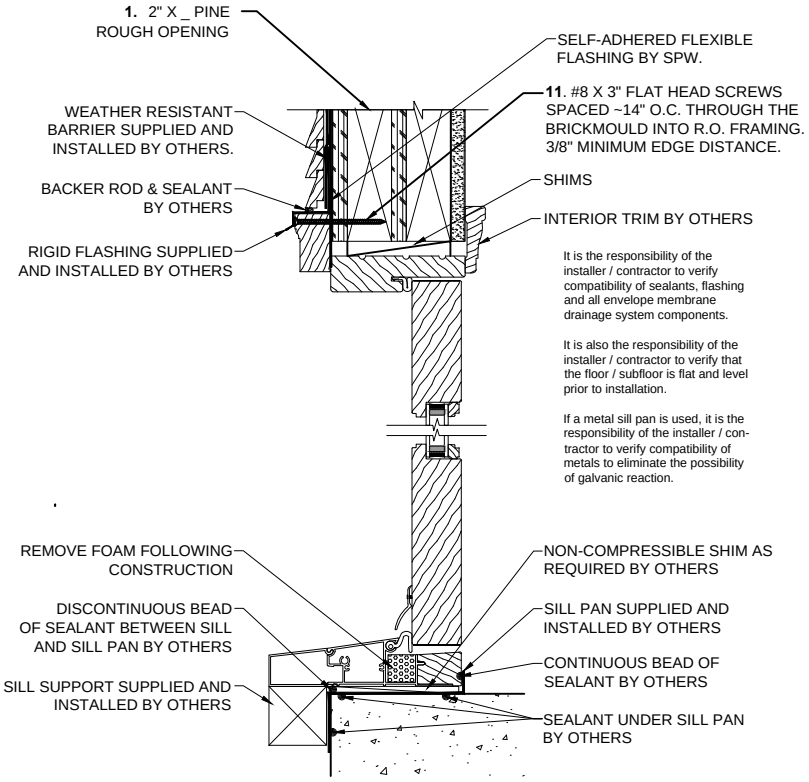

VERTICAL SECTION

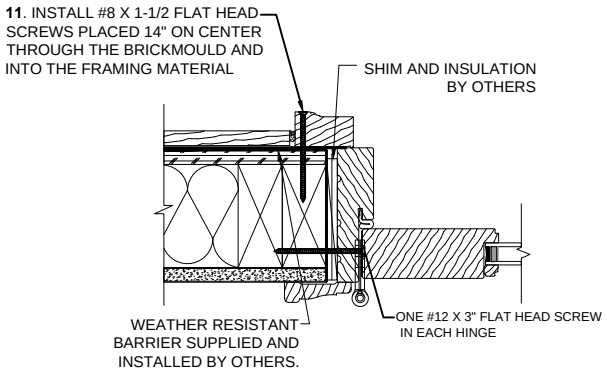

OPERATING PANEL

HORIZ. SECTION
(SIDE JAMB)

INSTALLATION NOTES:

1. USE 2" x _ PINE FOR ROUGH OPENING
2. APPLY A CONTINUOUS BEAD OF SEALANT ALONG THE BACKSIDE OF THE NAIL FLANGE ALONG BOTH SIDE JAMBS AND HEAD
3. PLACE WOOD SHIMS EVERY 6-10"
4. 3/4" MAXIMUM SHIM SPACE AT HEAD AND 3/8" AT SIDE JAMB
5. TACK THE DOOR IN PLACE WITH ONE #8 X 3" FLAT HEAD SCREW IN THE TOP BRICKMOULD WITHIN 3"-6" OF EACH CORNER INTO R.O. FRAMING. 3/8" MINIMUM EDGE DISTANCE
6. 1" MINIMUM FASTENER EMBEDMENT INTO ROUGH FRAMING MATERIAL
7. MAXIMUM DOOR SIZE: B.U.S. (Basic Unit Size) =

   --- SINGLE UNIT, MAXIMUM BASIC UNIT FRAME SIZE:

   74" (1893mm) x 98" (2489mm)
8. THIS INFORMATION APPLIES TO THIS SIZE AND SMALLER UNITS
9. INSTALL ONE #12 X 3" FLAT HEAD SCREW IN EACH HINGE INTO THE TRIMMER STUD TO ENSURE PROPER ANCHORING OF THE DOOR
10. INSTALL ONE #12 X 3" FLAT HEAD SCREW THRU THE HEAD STRIKE PLATE
11. INSTALL #8 X 3" FLAT HEAD SCREWS SPACED 3"-6" FROM THE CORNERS AND APPROXIMATELY 12"-16" ON CENTER, THROUGH THE BRICKMOULD INTO R.O. FRAMING. 3/8" MINIMUM EDGE DISTANCE
12. APPLY POLYURETHANE SEALANT OVER EACH SCREW HEAD
13. APPLY SEALANT AROUND THE PERIMETER OF THE UNIT AFTER THE EXTERIOR WALL FINISH HAS BEEN APPLIED.

Installation requirements may vary in particular locations and in other types of construction. Proper installation is essential, and Sierra Pacific Windows, recommends consultation with an AAMA Certified Installer, or other qualified, registered building professional before installation of any Sierra Pacific product. Proper installation of Sierra Pacific products is the responsibility of the installer. Sierra Pacific is not responsible for proper installation. Sierra Pacific is not responsible for the design of, conditions in, or performance of building construction beyond the perimeters of the Sierra Pacific units. Sierra Pacific is not responsible for proper integration of the Sierra Pacific units with the weather-repellent systems of the building.